SC12 Stripper

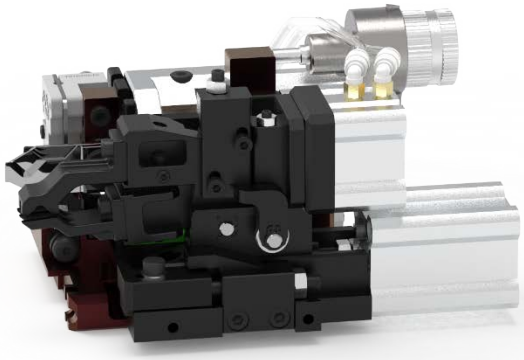

SC12

TECHNICAL DATASHEET

Applications	Wire stripping and insertion into pre-insulated terminals
Wire stripping system	Stripping and transfer to the crimping axis
Processable cable cross-section	Min 0.35 mm² (22 AWG) Max 6 mm² (9 AWG)
Insulation diameter	not available
Stripping length	Min 2.5 mm (0.1 in) Max 12 mm (0.47 in)
Jacket stripping length (multi-core cables)	not available
Functions	BHC Bad Crimp Holder
Cycle start	Foot pedal or Cable sensor (automatic)
Supply system	Crimping machine electronic system + pneumatic system
Control unit	Digital control unit or machine display
Weight	3.8 Kg (8.4 lb)
Dimensions [LxPxH]	190 x 130 x 110 mm (7.5 x 5.1 x 4.3 in)
Operating pressure	6 Bar (87 psi)
Air consumption	0.48 Nl/cycle
Compatibility with Mecal Applicators	Frontal applicators and Left-side applicators
Compatibility with Mecal Crimping machines	TT – P107c – P020i – P040 – P040i – P080 – P080i

ACCESSORIES



CONTROL UNIT



INTEGRATED CONTROL UNIT FOR INVERTER CRIMPING MACHINES



CDA10



BASEPLATE FOR ACCESSORY INSTALLATION

DESCRIPTION

SC12 is a compact wire stripping unit capable of processing cables from 0.35 mm² (22 AWG) up to 6 mm² (9 AWG). It is designed exclusively for use with pre-insulated terminals.
After stripping, the wire is transferred to the crimping machine working axis and inserted into the pre-insulated terminal for the crimping operation.
SC12 can be operated manually via foot switch or automatically through the integrated wire presence sensor.
When combined with a load cell system that detects faulty crimps, SC12 enables retention of rejected wires.
The system can be installed on Mecal crimping machines equipped with a base plate for accessory integration.

MECAL s.r.l. – Strada per Felizzano 18, 15035 Fubine Monferrato (AL) Italy – www.mecal.net – info@mecal.net

Datasheet SC12_EN_rev00 2024/09 – Rev.00

Mecal S.r.l. reserves the right to modify the characteristics of the product described in this datasheet without notice.